DMX512 [200-240Vac]

Round Shape Constant Current LED Driver
Multi-Current Output

DMX | RDM | Dimming

SMT-R*-EUDMX Series - Multi-Current output

1 CH
Dimming

1 - 100%
Full dimming range

Flicker-free
Smooth dimming

RDM function
Setting address

DIP
Adjustment Current

mA
Multiple Current for choice

Setting address

Dimming curve

NFC Programming

Perfect dimming performance for LED fixtures

Stage lights | Spotlights | Downlights | Panel lights | Garden light

Wiring diagram

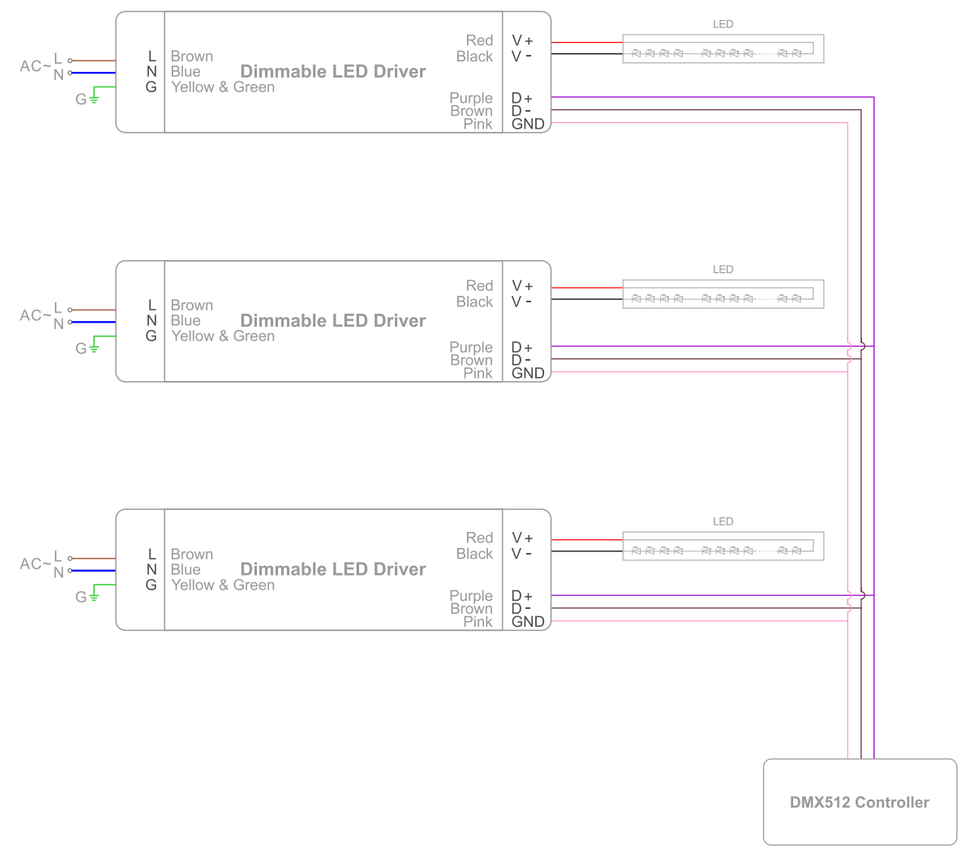

DMX512 Dimming Series (200-240VAC)

Round Shape Multi-Current Output LED Driver

DMX | RDM | Dimming

Dimming

- **SMT-R*-EUDMX** series Ultra-high PF value and low THD.
- The **SMT-R*-EUDMX** series based on DMX 512 protocal , should be provided with RDM / NFC function.
  SMT-R*-EUDMX series：Constant current 10-50W with 1 channels, High PF & efficiency are designed for the energy saving
- 1-100% dimming, universal compatibility and flicker-free.
- Dimming depth 1%
- ProNFC APP & Handheld device function:
  SMT-R*-EUDMX model
  - Setting address
  - Setting current
  - Choosing dimming curve

ProNFC App

NFC Handheld device

RDM

ProNFC APP Download

For iPhone users

For Android users

Dip adjustment current

NFC setting address and current

Circular plastic driver

10W-50W

For dry and damp location

SMT-R0401400-EUDMX-P

1 2 3 4 5 6

1. **R** : Round Shape LED Driver
2. **Power** : 10W / 15W / 20W / 25W / 30W / 50W
3. **Max. Output Current**
4. **European Standards**
5. **DMX** : DMX512 Dimming
6. **P** : Circular Plastic Driver

1 CH Dimming

1 - 100% Full dimming range

Flicker-free Smooth dimming

DIP Adjustment Current

12V/0.3A Built-in Auxiliary power

RDM function Setting address

mA Multiple Current for choice

Setting address

Dimming curve

NFC Programming

Power	Picture	Output (ON / OFF)	Model	Channels	Location	Others standard
10W	54*48.2*24mm Class 2	3-42V 100mA 3-42V 150mA 3-42V 200mA 3-40V 250mA 3-33V 300mA 3-28V 350mA 3-25V 400mA 3-22V 450mA	SMT-R0100450-EUDMX-P	1CH	Dry Damp	**Class 2** **Class P**
15W	54*48.2*24mm Class 2	3-42V 150mA 3-42V 200mA 3-42V 250mA 3-42V 300mA 3-42V 350mA 3-37V 400mA 3-33V 450mA 3-30V 500mA	SMT-R-0150500-EUDMX-P	1CH	Dry Damp	**Class 2** **Class P**
20W	64*58.4*24mm Class 2	3-42V 250mA 3-42V 350mA 3-42V 400mA 3-42V 450mA 3-40V 500mA 3-36V 550mA 3-33V 600mA 3-29V 700mA	SMT-R-0200700-EUDMX-P	1CH	Dry Damp	**Class 2** **Class P**
30W	64*58.4*24mm Class 2	3-42V 300mA 3-42V 400mA 3-42V 500mA 3-42V 600mA 3-42V 700mA 3-37V 800mA 3-33V 900mA 3-28V 1050mA	SMT-R-0301050-EUDMX-P	1CH	Dry Damp	**Class 2** **Class P**
40W	74.4*66.4*24mm Class 2	3-42V 400mA 3-42V 500mA 3-42V 600mA 3-42V 700mA 3-42V 900mA 3-38V 1050mA 3-33V 1200mA 3-29V 1400mA	SMT-R-0401400-EUDMX-P	1CH	Dry Damp	**Class 2** **Class P**
50W	74.4*66.4*24mm Class 2	3-42V 600mA 3-42V 700mA 3-42V 900mA 3-42V 1050mA 3-42V 1200mA 3-38V 1350mA 3-33V 1500mA 3-29V 1750mA	SMT-R-0501750-EUDMX-P	1CH	Dry Damp	**Class 2** **Class P**

DMX512